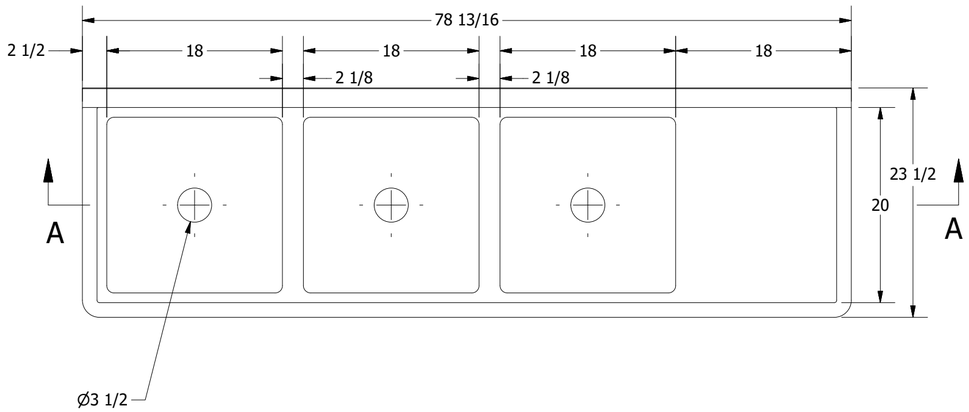

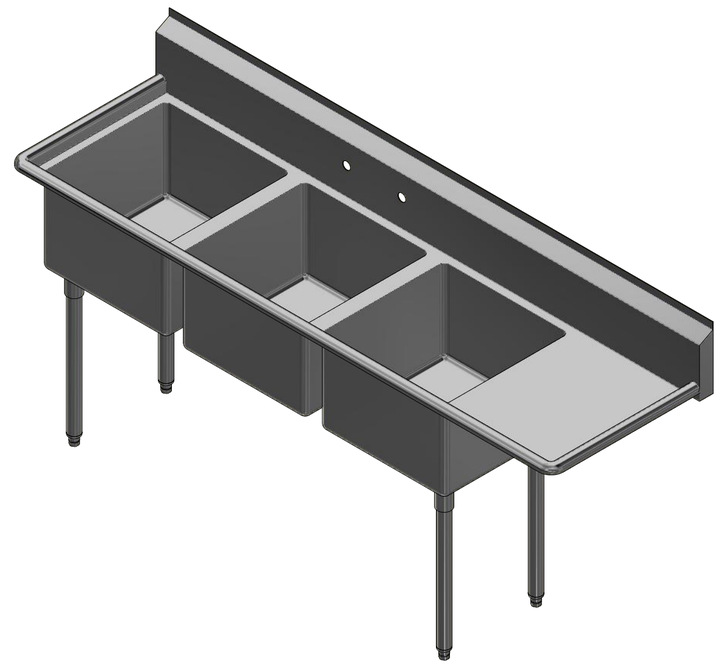

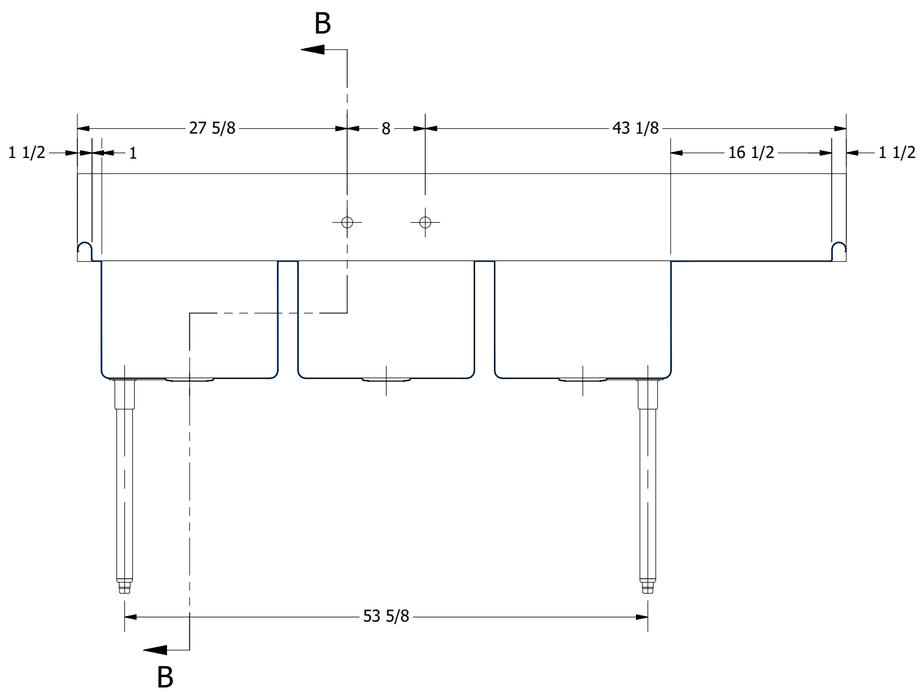

SECTION A-A
SCALE 1:12

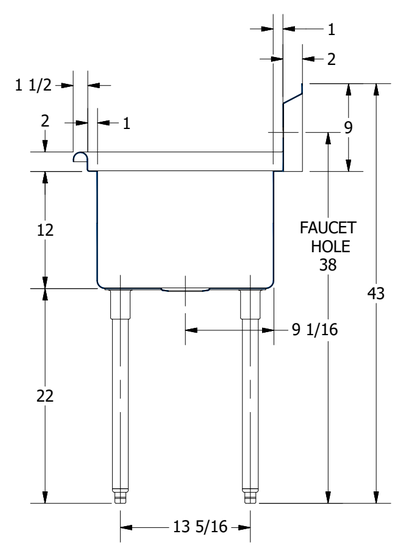

SECTION B-B
SCALE 1:12

REV	DESCRIPTION	DATE	APPROVED

REVISION HISTORY

griffin PRODUCTS INC.
303 Blue Bird Parkway
Wills Point, Texas 75169
(800) 379-9709 /Fax: (903) 873-6389
www.gpsink.com

THE INFORMATION CONTAINED IN THIS DRAWING IS THE SOLE PROPERTY OF GRIFFIN PRODUCTS, INC. ANY REPORDUCTION IN PART OR AS A WHOLE WITHOUT THE WRITTEN PERMISSION FROM GRIFFIN PRODUCTS, INC. IS PROHIBITED.

PART NUMBER **388.08**		TITLE SABINE SERIES SCULLERY SINK			
PRODUCT CATEGORY SCULLERY SINK		DESCRIPTION 16GA 3 COMPARTMENTS SINK WITH RIGHT DRAINBOARD			
		MATERIAL 16GA (0.06 in) 304 STAINLESS STEEL		ALL DIMENSIONS ARE IN X INCHES	
DRW. BY / DATE DNZ 01/24/18	APPROVED BY / DATE	REV.	SCALE 1:12	SIZE C	SHEET 1 / 1